viZaar
industrial imaging AG

MADE IN GERMANY

VUMAN® E3+ dition -64

FOCUS ON YOUR TASK

DOWN TO Ø 6 **MM** UP TO **30 M** PROBE LENGTH

The Definition of Long Range

THE LARGEST
TOUCHSCREEN
WITH 1440 X 1080 PX
RESOLUTION

MAXIMUM
FLEXIBILITY
MULTI POSITION VUSCREEN
FOR OPTIMUM ERGONOMICS

THE SHARPEST
IMAGE
THANKS TO OUR PATENTED
REMOTE FOCUS TECHNOLOGY

THE BRIGHTEST
DUAL LED LIGHTS
WITH LONG TIME WARRANTY

THE MOST ADAPTABLE
VIDEO IN/OUT
HDMI AND ANALOGUE

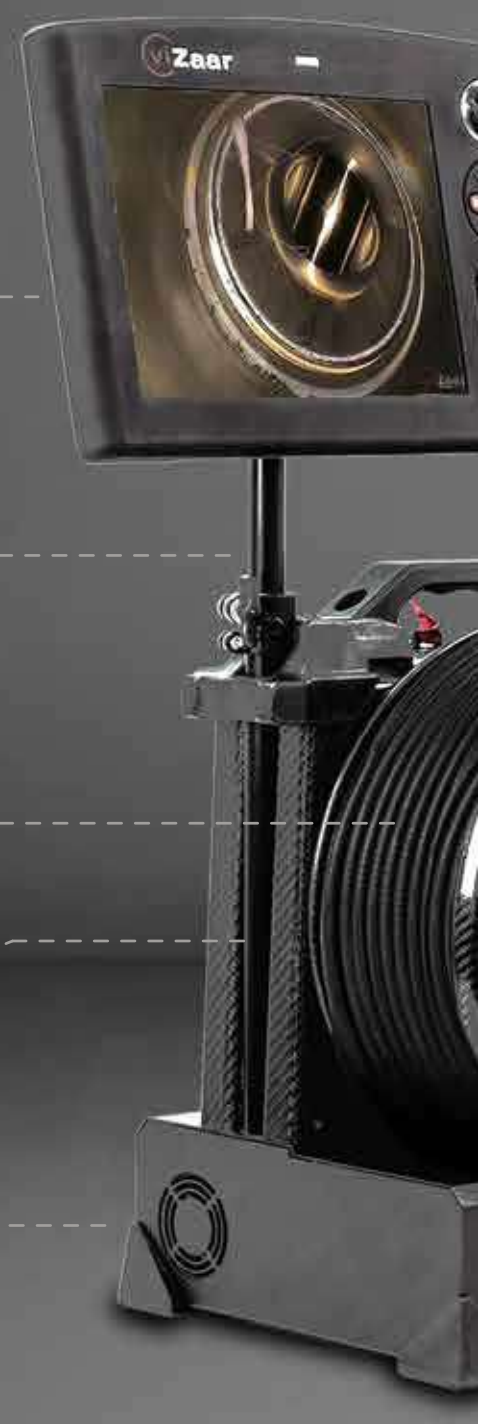

VUMAN® E3+ dition -64

THE MOST PRECISE
ARTICULATION
JOYSTICK CONTROL
ABSOLUTE AND RELATIVE ARTICULATION

THE MOST INTUITIVE
OPERATION
SLIDEBARS FOR
REMOTE FOCUS AND ILLUMINATION

THE SAFEST
DEPLOYMENT DRUM
WITH HANDLE FOR EASY STOWING
OF THE PROBE

THE LIGHTEST
CARBON FIBER HOUSING
HIGH QUALITY AND ROBUST WITH
LIFETIME WARRANTY

THE UNIQUE
MICRO COMPRESSOR
MAINTENANCE - FREE AND DIRECTLY
INTEGRATED IN THE SYSTEM

HIGH PERFORMANCE
NiMH - BATTERY
UP TO 2.5 HOURS OPERATION, INCL. MICRO COMPRESSOR
WITHOUT EXTERNAL POWER SUPPLY

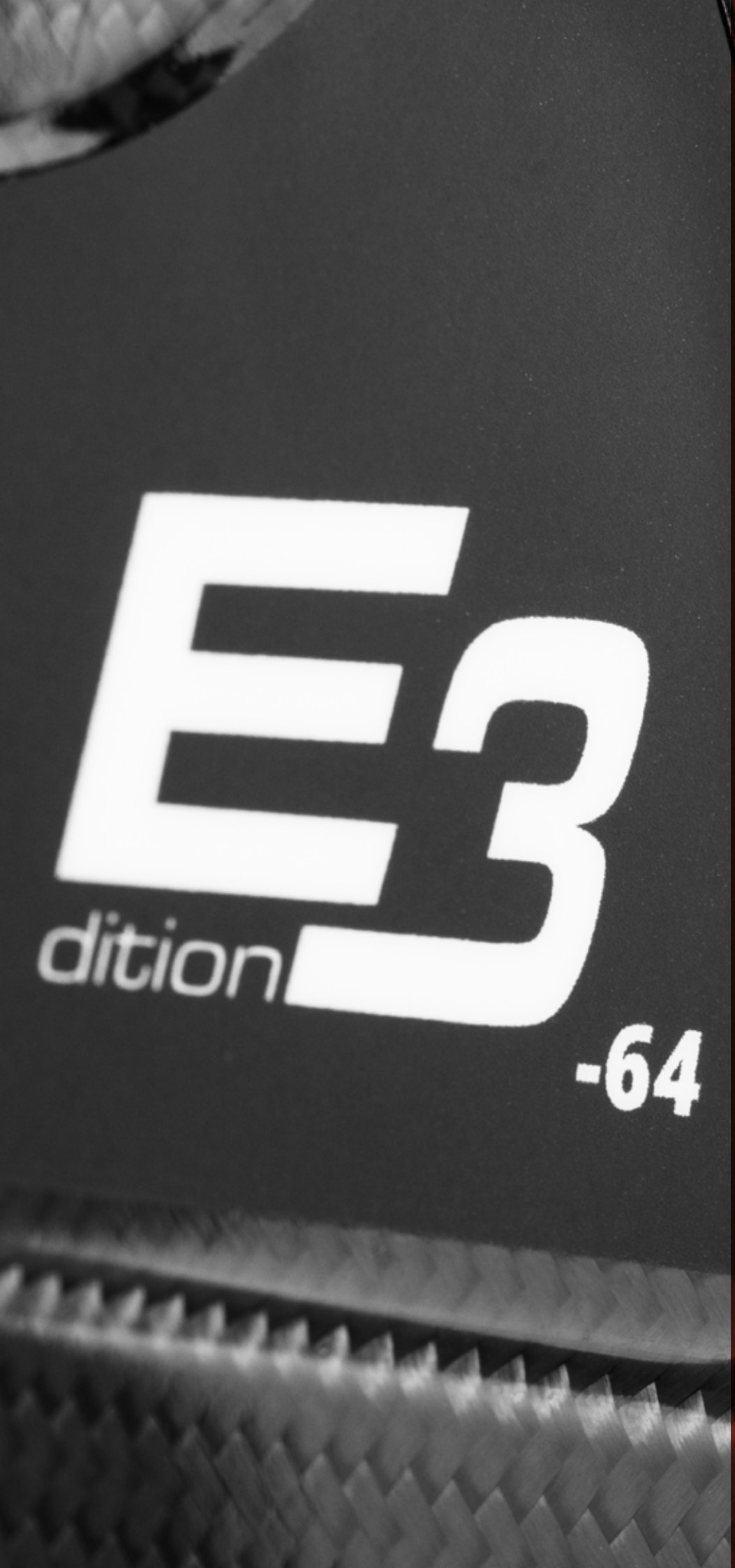

UNIQUE FEATURES

SUCCESS IN EVERY INSPECTION

LARGEST TOUCHSCREEN

The unique and portable LCD control unit with a 10.4“ touchscreen. Control your probe and all features via touchscreen, slidebars and direct access buttons. Also functional with protective gloves.

MEDIA AND DATA CAPTURE

Record high resolution videos and images with personalized text entries, reference charts or customer logos. Manage all inspection data in the customizable file manager and export your data to a USB drive.

POWERFUL SOFTWARE UPDATE

Work faster, more efficiently and achieve maximum productivity with the new software.

HIGH POWER DUAL LED

The upper and lower LEDs can be independently controlled to allow for increased contrast or to avoid any reflection issues. Recieve a clear visual in large cavities, thanks to the integrated boost funktion and extended shuttertime.

REMOTE FOCUS

Patented remote focus technology allowing for full focal control without changing optic adapters.

X-WAY ARTICULATION

VUMAN® interchangeable probes with our unique 4-way camera head articulation up to 30 m lenght. The redesigned integrated microcompressor provides even more accuracy during visual inspections.

SAFE PROBE DEPLOYMENT DRUM

Avoid tripping and damage to your probe while maintaining a clean working environment. Enjoy full X-WAY probe articulation with the majority of your probe stored on the probe deployment drum.

CARBON HOUSING

Robust and durable, compact and lightweight. The carbon housing is optimized for industrial environments.

BATTERY POWERED

Powerful modular NiMH battery for maximum mobility. Charges in use, if on mains power. Seamlessly switch between charging, battery mode and mains. IATA air transport compliant, non-flammable.

MEASUREMENT FUNCTION

E3+: Integrated measurement system for measurement of linear distance, radius, circumference and area. Limitless reference measurement.

HOT SHOP REPAIR

Our Hot Shop service meets the demands of all our customers, even those in the most demanding industries. viZaar is ISO 9001, ISO 14001 and KTA 1401 certified. Thus the repair and spare parts service can be conducted in nuclear facilities.

INTEGRATED SOLID STATE DRIVE

Store countless images and videos securely and safely on to the integrated 80GB solid state hard drive.

LIFETIME WARRANTY

THE ULTIMATE LONG RANGE VIDEOSCOPE INSPECTION SYSTEM

PERFECT VISION FOR EVERY WORKING LENGTH

With up to 30 m long video probes, the VUMAN E3/E3+ is specifically designed for inspections that require a long range. The proprietary hybrid, high power, polymer dual LED illumination system provides class leading, homogenous illumination and excellent colour temperature. There is no need for a laser safety officer when operating the VUMAN®.

The unique patented REMOTE FOCUS system, incorporated into the VUMAN® system, ensures perfect documentation results without the need to withdraw the videoprobe from the test object and to change lenses. This allows a more time - efficient inspection, reduced fatigue and cuts overall costs.

ONE DEVICE FOR EVERY APPLICATION

CLOSE UP TO ∞

POPULAR APPLICATIONS

Plant and pipeline constructions

- welds
- heat tinting
- corrosion, erosion
- foreign object search and retrieval (in combination with retrieval tools)

Turbines, pumps, gears, generators

- cavitation, erosion, salinisation
- surfaces, discolouration
- cracks, breakages
- corrosion
- FOSAR

RANGE OF FOCUS AND ILLUMINATION

VIZAAR REMOTE FOCUS VS STANDARD FIX FOCUS SYSTEMS

UNLIMITED

Carry out inspections in only one operation, without repeatedly inserting and retracting the probe into and from the application for the inconvenient change of optic adapters. Benefit from always having the best image quality.

Patented remote focus technology by viZaar

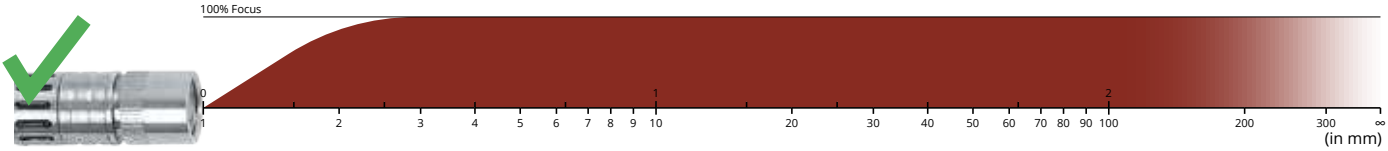

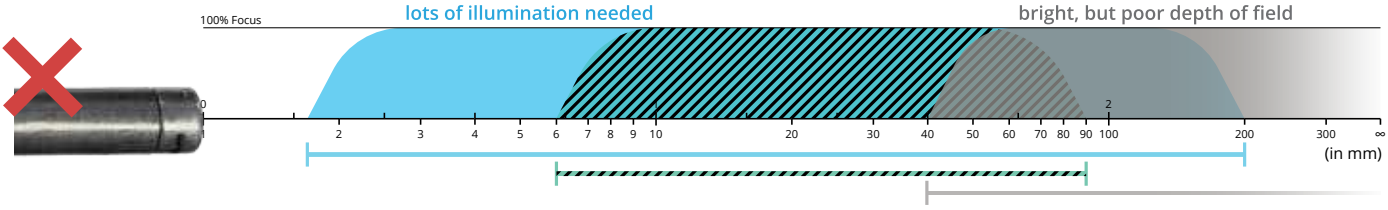

Conventional fix focus systems

LIMITED

The use of tip adapters is limiting as during the inspection, the scope may have to be withdrawn for several tip changes. Tip adapters also absorb light and thus reduce image quality.

THE UNIQUE INTERCHANGEABLE 6 MM VIDEO PROBE

NOW FOR EVEN NARROWER TEST ENVIRONMENTS

With a diameter of only 6.1 mm and probe lengths up to 30 m, our VUMAN 6 mm X-WAY video probe is the only one of its kind. This probe makes inspections possible which before required expensive opening of systems and long downtimes.

OPTIONAL OPTIC ADAPTERS

Perfectly equipped for your individual application!

THE INTERCHANGEABLE PROBE SYSTEM

Economic and efficient: one VUMAN E3/E3+ base unit and 18 standard video probes offer an unchallenged diversity of inspection tools that no one else provides. In addition to the popular Ø 6.1 mm video probes, there are several Ø 8.4 mm and Ø 12.7 mm probes with lengths up to 30 m.
The plug-and-play system facilitates a simple and hasle free probe exchange, which can easily be done in any environment. The fast, simple and versatile – all in one system.

VUMAN E3/E3+-64 base units are compatible with all previous VUMAN V3 probes!

VERSATILE PROBE ARTICULATION

CLASS LEADING 4-WAY ARTICULATION FOR LONG RANGE VIDEO PROBES

The pneumatic X-WAY articulation system allows for full 4 axis (up/down/left/right) articulation of all VUMAN® X-WAY probes up to 30 m length. The articulation is controlled via joystick and powered by an integrated software contolled micro-compressor. There is no need for external air sources or gas canisters.
Discover the advantages of a highly precise camera head articulation, when operating in relative articulation mode with the activated freeze function. Switch to absolute articulation when you need to work fast.

IMPROVED COMPRESSOR TECHNOLOGY

The VUMAN E3-64 upgrade does not only improve the performance of the inspection system, but also the operation of the probe. Due to the newly optimized internal probe structure, the camera articulates with more precision.

CENTERING TOOLS

THE IDEAL CENTERING AID FOR EACH PROBE

The use of centering tools...

- ensures a constant distance to the tested surface and delivers significant results, e.g. during the inspection of longitudinal welds and orbital weld seams
- reduces friction and increases the “feel” for maneuvering the probe
- protects probe and especially the camera head from residue and dirt
- leads to more precise probe positions and shorter inspection times

Universal centering tool: suitable for most 6 and 8 mm video probes on the market.

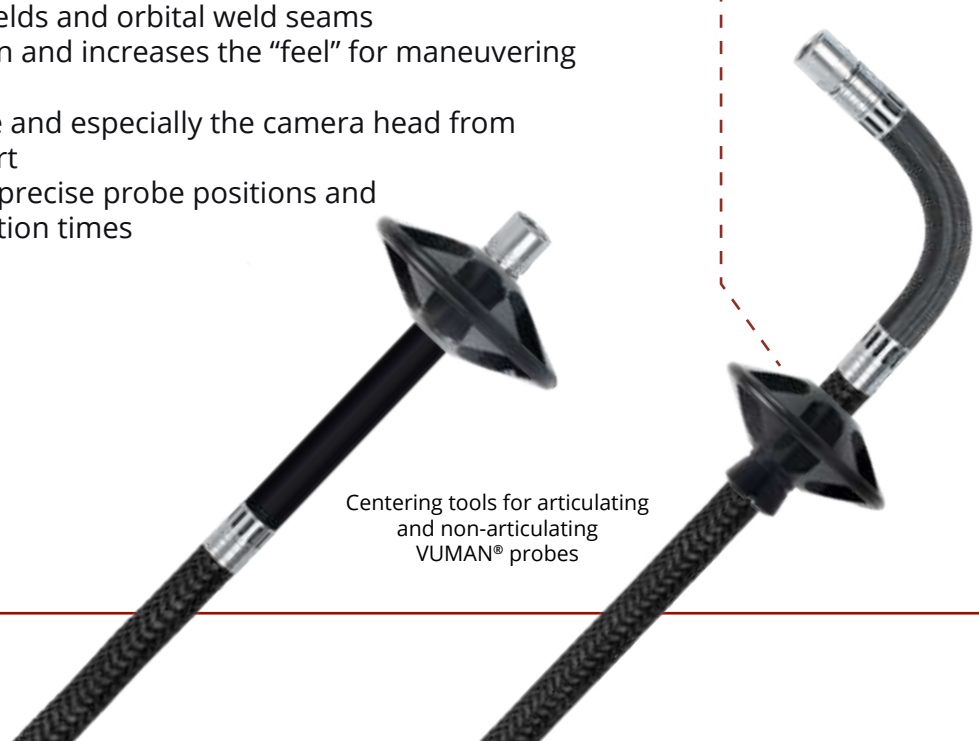

Centering tools for articulating and non-articulating VUMAN® probes

VUMAN® INTERCHANGEABLE VIDEO PROBES

A TOOL FOR **EVERY** TASK

If you have a need for long range inspection, the VUMAN® system can now fulfil even more of your needs than before: From 6.1 mm articulationg probes to 12.7 mm 360° rotating orbital inspection probes.

THE WORLD'S THINNEST ARTICULATING LONG RANGE PROBE!

Our professional push rod, suitable for every VUMAN® probe!

Some applications require a variety of video probes with different lengths and diameters. The concept of interchangeable probes allows for a quick and simple exchange of video probes on-site, avoiding the parallel use of several endoscope systems.
In case of contamination, e. g. in chemical or nuclear industry, it also allows for the probe to be removed or disposed without having to clean or dispose of the entire system.

:: **Maximum range**
Interchangeable VUMAN® video probes are available in lengths from 5 m to 30 m and with optional push rods.

:: **Optimally functional construction**
The system was developed based on the feedback of our customers and service technicians, and optimized in the 3rd generation.

:: **Ideal probe characteristics**
The tungsten or polyurethane stainless steel reinforced composite construction for excellent stability, best sliding properties and torsional stiffness.

:: **Always in focus**
The patented Remote Focus technology is offering the best resolution on the market: 30 µm at 4 mm distance without additional optic adapters.

:: **Perfect for Nuclear**
viZaar is KTA 1401 certified. Therefore, our VUMAN technology is compliant with all requirements for the use in nuclear power plants.

:: **Optimized for your inspection**
Our non-articulating video probes are designed for heavy duty tube inspections over long periods. Operated with centering devices, these video probes with their spring loaded probe tip are an economically unbeatable and robust remote visual inspection system for your tube inspection needs.
X-WAY probes will help you overcome the most difficult inspections such as visual testing of turbines and pumps.

:: **Endlessly rotating camera head**
Revolver 12.7: patented motor-driven camera head with variable rotation speed and direction for optimal testing of inner pipe walls.

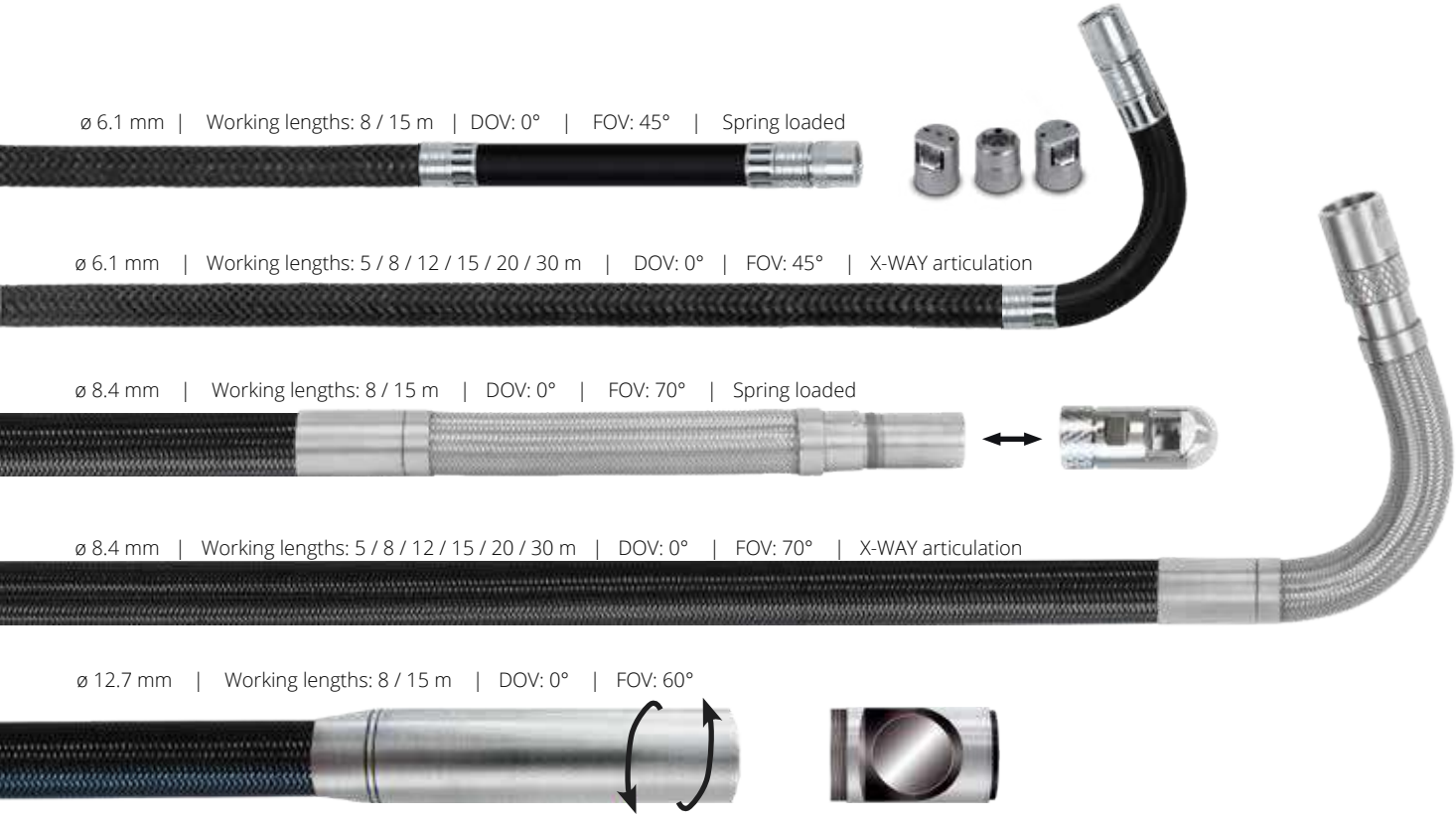

Continuously rotating head with side view adapter and variable rotation speed

THE UNIQUE AND PORTABLE VUSCREEN

BRIGHTER, HIGHER RESOLUTION AND MORE CONTRAST

The VUSCREEN has always been known...

- to be the biggest touch-display with 10.4"
- for its PPE compatibility: e.g. usable with gloves
- for its intuitive icon control and simple direct access buttons
- to offer precise articulation control via joystick

Now, you will experience:

- a higher resolution of 1440 x 1080 px
- a higher luminance of 850 cd/m²
- an extended color space for even better contrasts

1. Carbon fiber with elastomer bumpers
2. Battery status LED
3. Intuitive joystick control
4. Direct access buttons
5. Slide bar for illumination and focus
6. Capacitive touchscreen, operation with protective gloves possible

You would like to upgrade?

As always, we want long term customers to benefit from our upgrades. Therefore, after a firmware update, you can also use the new VUSCREEN with the VUMAN RA-Y!

LITHIUM-FREE BATTERY

SAFE OPERATION AND TRANSPORTATION

Maximum mobility and flexibility is provided by the new and improved NiMH modular battery pack. It offers the best performance, incl. compressor operation.
Depending on the intensity of use, the VUMAN can be operated 1 to 2 hours in battery mode. Seamlessly switch between charging, battery mode and mains.
Due to its extensive intrinsic safety, fire hazard is minimized. Therefore, the VUMAN battery is approved for air transport.*

*Please beware the specific regulations of your country.

BASE UNIT	VUMAN® E3	VUMAN® E3 (64) X-WAY (NEW)	VUMAN® E3+	VUMAN® E3+ (64) X-WAY (NEW)
Dimensions in mm / inch	(W) 340 x (H) 425 x (D) 280 (W) 13.39 x (H) 16.73 x (D) 11.02	(W) 340 x (H) 425 x (D) 280 (W) 13.39 x (H) 16.73 x (D) 11.02	(W) 340 x (H) 425 x (D) 280 (W) 13.39 x (H) 16.73 x (D) 11.02	(W) 340 x (H) 425 x (D) 280 (W) 13.39 x (H) 16.73 x (D) 11.02
Weight	8.2 kg / 18.1 lbs	10 kg / 22 lbs	8.2 kg / 18.1 lbs	10 kg / 22 lbs (11.5 kg / 25.4 lbs)*
X-WAY drive	-	Integrated compressor, maintenance free.	-	Integrated compressor, maintenance free.
Probe length	max. 20 m / 65.6 ft.	max. 20 m / 65.6 ft.	max. 20 m / 65.6 ft.	max. 20 m / 65.6 ft. or 30 m* / 100 ft.
Construction	Aluminium-Carbon fiber with elastomer bumpers			
LED light source	Color temperature: 6.1 mm: 5500 K, 8.4 mm: 5000 K | lifetime warranty			
System memory	10GB SSD	10GB SSD	80GB SSD	80GB SSD
VUSCREEN mount	%	%	%	%
VUSCREEN trans-port bracket	%	%	%	%
Connectors	USB 3.0, 12V (DC) / 750mA Out, optional external compressed air (X-WAY)			
Video input	-	-	PAL / NTSC, Composite, S-Video	PAL / NTSC, Composite, S-Video
Video output	HDMI	HDMI	HDMI, optionally with additional analogue out (Composite, S-Video)	HDMI, optionally with additional analogue out (Composite, S-Video)*
AC input	100V (AC) - 240V (AC), 50 Hz - 60 Hz, max. 240 Watt			
Environmental specifications	Operation: -10°C (+14°F) to +48°C (+118°F) Storage: -25°C (-13°F) to +65°C (+149°F) Relative humidity: max. 95 %, non-condensing			
Software Kit	E3		E3+	
Software	• Default user with English user interface • Probe articulation display (X-WAY) • Articulation mode: absolute • Dual LED illumination with boost • White balance • Text generator (Latin/Cyrillic) • File manager • Image freeze function • Image capture (JPG) • Video recording (AVI up to 60 s) • Integrated media player • Backup function		**Additional features of the E3+** • Individual user 1-9 and multilingual user interface • Absolute and relative articulation mode (with freeze function) • Individually controllable dual LED illumination with boost • Brightness, contrast, color saturation • Continuous shooting with varying illumination • Extended brightening features (time exposure) • Digital image processing (presets) • Mirror, zoom and rotate • Measurement function • Individual reference chart / customer logo • Image freeze with point marker • Audio comments • Unlimited video recording • Choose image and video format (JPEG, BMP, AVI, MPG) in three quality levels • Extended text generator (e. g. editable text blocks, text and background color) • Extended file manager • Documentation of external video sources	

* The 30 m version of VUMAN® E3+ X-WAY is always fully equipped and comes with an extended probe deployment drum.

VUMAN E3/E3+$_{-64}$ base units are compatible with all previous VUMAN V3 probes!

VUMAN® E3 PROBES	6 X-WAY	6	8 X-WAY (64)	8	REVOLVER 12.7
Probe diameter in mm / inch	6.1 / 0.24	6.1 / 0.24	8.4 / 0.33	8.4 / 0.33	12.7 / 0.5
Probe length in m / ft.	5 / 16.4 8 / 26.3 12 / 39.4 15 / 49.3 20 / 65.6 30 / 100	8 / 26.3 15 / 49.3	5 / 16.4 8 / 26.3 12 / 39.4 15 / 49.3 20 / 65.6 30 / 100	8 / 26.3 15 / 49.3	8 / 26.3 15 / 49.3
X-WAY articulation left / right	up to max. 100°*	-	up to max. 140°*	-	-
X-WAY articulation up / down	up to max. 120°*	-	up to max. 160°*	-	-
Springloaded camera head	-	%	-	%	-
Remote Focus (RF)	%	%	%	%	-
Focus range	3 mm to ∞	3 mm to ∞	5 mm to ∞	5 mm to ∞	manual focus
Direction of view (DOV)	0°	0°	0°	0°	0° (360° rotating)
Field of view (FOV)	45°	45°	70°	70°	60°
Resolution	470.000 px	470.000 px	440.000 px	440.000 px	440.000 px
Mounting for centering device	%	%	%	%	%
Mounting for side view adapter	%	%	%	%	%
Material	Hard wearing tungsten braid on polyurethane probe		Ultra flexible stainless steel braid on polyurethane probe		
Waterproof up to 1.5 bar / 22 psi	%	%	%	%	splash waterproof
Temperature in operation	-10°C (+14°F) to +80°C (+176°F)	-10°C (+14°F) to +80°C (+176°F)	-10°C (+14°F) to +80°C (+176°F)	-10°C (+14°F) to +80°C (+176°F)	-10°C (+14°F) to +80°C (+176°F)
Storage temperature	-25°C (-13°F) to +65°C (+149°F)	-25°C (-13°F) to +65°C (+149°F)	-25°C (-13°F) to +65°C (+149°F)	-25°C (-13°F) to +65°C (+149°F)	-25°C (-13°F) to +65°C (+149°F)
Centering device kit included in scope of delivery	-	-	-	-	%

*depending on the position of the probe

VUMAN V3 X-Way-64 probes are compatible with all previous VUMAN E3/E3+ base units.

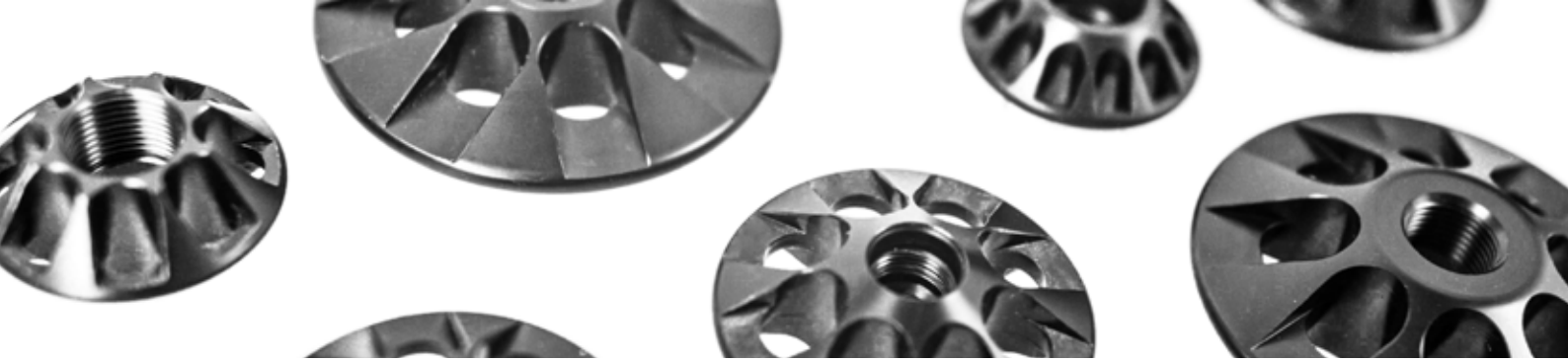

ACCESSORIES		
Transport case with wheels VUMAN® base unit	Dimensions in mm / inch: (W) 635 / 25 x (H) 510 / 20.08 x (D) 365 / 14.37 Weight (empty): 8.7 kg / 19.1 lbs	
Transport case VUMAN® spare probe	Dimensions in mm / inch: (W) 415 / 16.34 x (H) 465 / 18.31 x (D) 190 / 7.48 Weight (empty): 3.25 kg / 7.16 lbs	
Optional optic adapters	Side view prism for 6 mm interchangeable probes Side view prism with wide-angle for 6 mm interchangeable probes Wide-angle adapter for 6 mm interchangeable probes Side view prism for 8 mm interchangeable probes Side view mirror for 12.7 mm interchangeable probes	
Optional centering device kits	VUMAN® 6 mm X-WAY, Ø in mm / inch: 60 / 2.36 | 44 / 1.73 | 34 / 1.34 | 24 / 0.94 |17 / 0.66 VUMAN® 6 mm non-articulating, Ø in mm / inch: 44 / 1.73 | 19 / 0.74 VUMAN® 8 mm X-WAY, Ø in mm / inch: 60 / 2.36 | 44 / 1.73 | 34 / 1.34 | 24 / 0.94 | 17 / 0.67 VUMAN® 8 mm non-articulating, Ø in mm / inch: 60 / 2.36 | 44 / 1.73 | 34 / 1.34 | 24 / 0.94 | 17 / 0.67 VUMAN® Revolver 12.7 mm, Ø in mm / inch: 60 / 2.36 | 46 / 1.81 | 36 / 1.42 | 26 / 1.02	
Optional pushing aid	PE coated glass fiber pushing aids with 4.5 mm / 0.17" for up to 30 m / 100 ft. video probe length	
Optional battery incl. charging unit	Capacity high-current NiMh battery: 11.000 mAh, 12 Volt Operation time: Up to 2.5h, X-WAY operation 5 % duty cycle	

Are you missing the ideal VUMAN configuration for your individual application? Contact us! viZaar is specialized in the development of customized special solutions. We will gladly assist and advise you.

www.vizaar.com

FURTHER INFORMATION

VUMAN® E3+ dition -64

XPANDING YOUR VU®

viZaar industrial imaging AG
Headquarter
Hechinger Straße 152
72461 Albstadt / Germany
Tel.: +49 7432 98375-0
Fax: +49 7432 98375-50
info@vizaar.com

viZaar industrial imaging AG
VT Service / Rental Service / Sales / Training Center
Lupusstraße 17
35789 Weilmünster / Germany
Tel.: +49 6475 91129-0
Fax: +49 6475 91129-29

viZaar industrial imaging AG
viZaar North Germany
VT Service / Rental Service / Sales
29339 Wathlingen / Germany
Tel.: +49 160 93777644
Fax.: +49 6475 91129-29

OUR SALES AND SERVICE OFFICES

viZaar NRW
Sales and Service Office
46348 Raesfeld / Germany
Tel.: +49 170 5703130

viZaar North
Sales and Service Office
25361 Krempe / Germany
Tel.: +49 171 5524094

viZaar South
Sales and Service Office
88161 Lindenberg in Allgäu / Germany
Tel.: +49 172 6019601

viZaar industrial imaging SA
3 rue Lambert
Parc Lavoisier
91410 Dourdan / France
Tel.: +33 1608 11818
Fax: +33 1645 99573
www.vizaar.fr
info@fort-fr.com

Authorised sales and service distributor of viZaar®:

FIBEROPTIC
Remote Visual Inspections

Via A. Diaz, 16/B
20073 Opera (MI)

info@fiberopticitalia.it
www.fiberopticitalia.it

Tel 0253031237
Fax 02396847628

Ver.: 2.6